Photoelectric Sensors

BOS 23K-PU-LR10-S4
Order Code: BOS016U

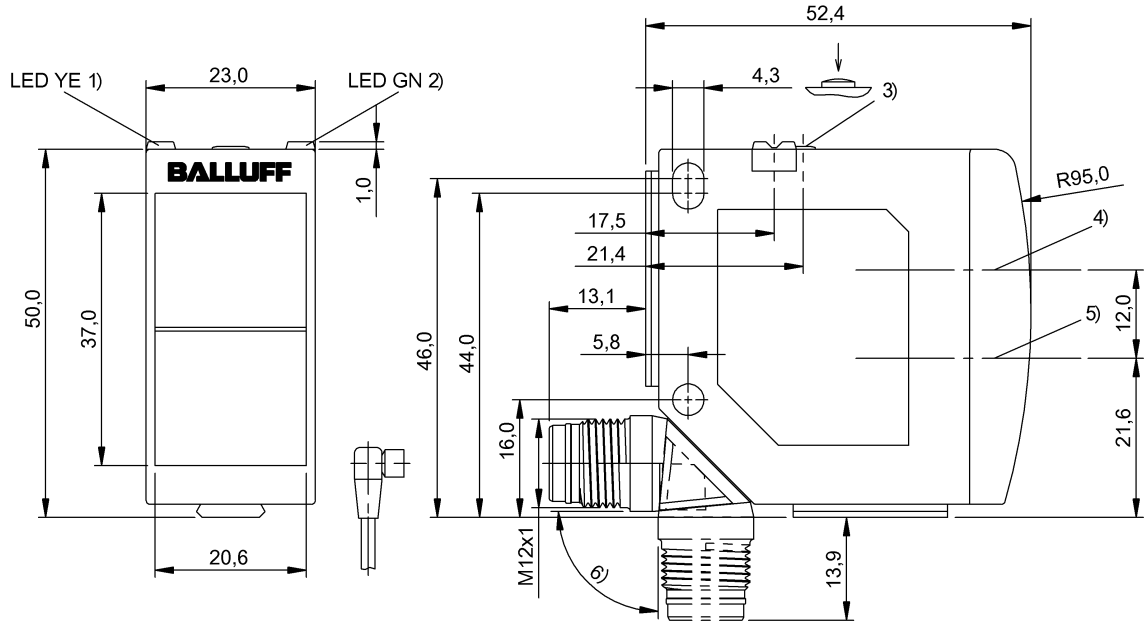

1) Output function/Error, 2) Operating voltage, 3) Sn, light/dark, 4) Optical axis receiver, 5) Optical axis emitter, 6) rotatable 270°

Basic features

Approval/Conformity	Ecolab CE cULus WEEE
Basic standard	IEC 60947-5-2
Principle of operation	Photoelectric sensor
Reference reflector	BOS R-22
Series	23K
Style	Square Connection can be rotated

Display/Operation

Adjuster	button
Display	Output function- LED yellow LED green: Power Teach - LED yellow+green, alt. Setting NO/NC - LED green, flashing Error - LED yellow, flashing
Setting	Light-on/dark-on Rated switching distance (Sn)

Electrical connection

Connection	Connector, M12x1-Male, 4-pin
Polarity reversal protected	yes
Protection against device mix-ups	yes
Short-circuit protection	yes

BOS 23K-PU-LR10-S4
Order Code: BOS016U

Electrical data

Input function	Key disable on/off Same function as button
No-load current Io max. at Ue	30 mA
Operating voltage Ub	10...30 VDC
Protection class	II
Rated insulation voltage Ui	75 V DC
Rated operating current Ie	100 mA
Rated operating voltage Ue DC	24 V
Ready delay tv max.	300 ms
Residual current Ir max.	50 µA
Ripple max. (% of Ue)	10 %
Switching frequency	2000 Hz
Turn-off delay toff max.	0.25 ms
Turn-on delay ton max.	0.25 ms
Utilization category	DC -13
Voltage drop Ud max. at Ie	2 V

Environmental conditions

Ambient temperature	-20...60 °C
EN 60068-2-27, Shock	Half-sinus, 30 g_n, 11 ms, 3x6
EN 60068-2-6, Vibration	10…55 Hz, amplitude 0.5 mm, 3x30 min
IP rating	IP6x
IP rating per DIN 40050	IPx9K

Functional safety

MTTF (40 °C)	373 a

Interface

Switching output	PNP normally open/normally closed (NO/NC)

Material

Housing material	PC ABS
Material sensing surface	PMMA

Mechanical data

Dimension	23 x 51 x 52.4 mm
Mounting part	Screw M4
Tightening torque max.	1.5 Nm

Optical features

Ambient light max.	5000 Lux
Average power Po max.	390 µW
Beam characteristic	Divergent
Blind zone	300 mm
Laser class per IEC 60825-1	1
Light spot size	9 x 9 mm at 12 mm
Light type	Laser red light
Polarizing filter	yes
Principle of optical operation	Retroreflective sensor
Pulse duration t max.	4.5 µs
Pulse frequency	13.3 kHz
Pulse power Pp max.	3.0 mW
Switching function, optical	dark-on/light-on
Wave length	655 nm

Range/Distance

Range	0...14 m
Rated operating distance Sn	14 m, Adjustable

Remarks

Do not press key using a pointed tool.
Order accessories separately.
Teach-in also possible when object is in motion.
The sensor is functional again after the overload has been eliminated.
For additional information, refer to user's guide.
Actuation object (target): gray card, 200 x 200, 90 % remission, lateral approach, approach direction vertical to lens axis plane.
For more information about MTTF and B10d see MTTF / B10d Certificate

Indication of the MTTF- / B10d value does not represent a binding composition and/or life expectancy assurance; these are simply experiential values with no warranty implications. These declared values also do not extend the expiration period for defect claims or affect it in any way.

Connector Drawings

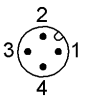

Wiring Diagrams (Schematic)

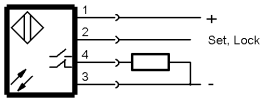

Opto Symbols

Warning Symbols

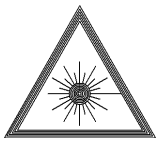

LASER CLASS 1 per IEC 60825-1