Photoelectric Sensors

BOS 18M-PUV-PR30-S4
Order Code: BOS01J9

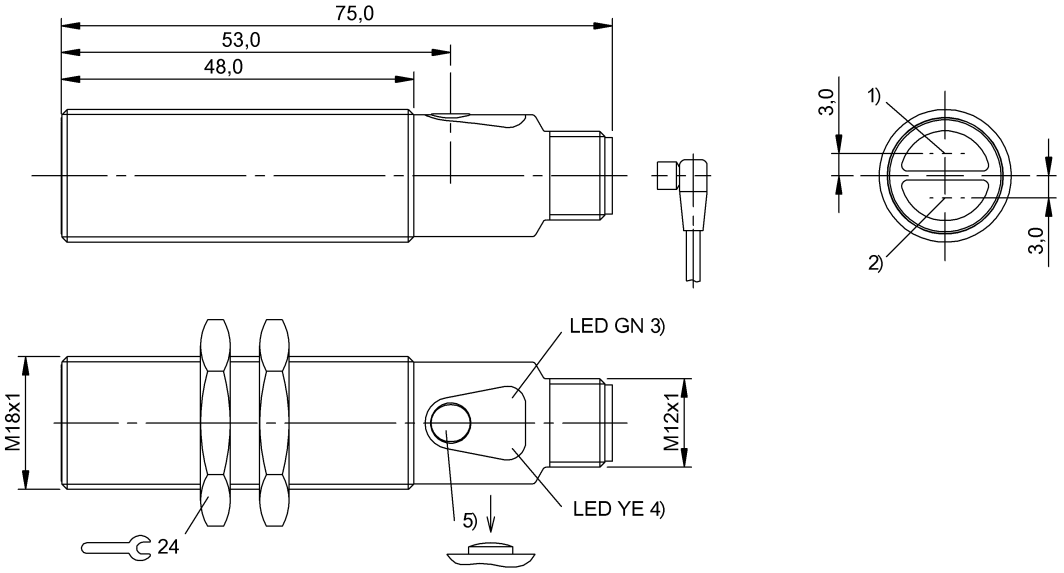

1) Optical axis receiver, 2) Optical axis emitter, 3) Power/short-circuit, 4) Light reception/limit area, 5) Sn

Basic features

Approval/Conformity	cULus CE UKCA WEEE
Basic standard	IEC 60947-5-2
Principle of operation	Photoelectric sensor
Series	18M
Style	Cylinder Straight optics

Display/Operation

Adjuster	button
Display	LED green: Power Limit range - LED yellow, flashing Short circuit - LED green, flashing LED yellow: Light received
Setting	Rated switching distance (Sn)

Electrical connection

Connection	Connector, M12x1-Male, 4-pin
Contact, surface protection	Gold plated
Polarity reversal protected	yes
Protection against device mix-ups	yes
Short-circuit protection	yes

Electrical data

Load capacitance max. at Ue	0.1 µF
No-load current Io max. at Ue	40 mA
Operating voltage Ub	10...30 VDC
Protection class	II
Rated insulation voltage Ui	75 V DC
Rated operating current Ie	100 mA
Rated operating voltage Ue DC	24 V
Ripple max. (% of Ue)	15 %
Switching frequency	1000 Hz
Turn-off delay toff max.	0.5 ms
Turn-on delay ton max.	0.5 ms
Utilization category	DC -13
Voltage drop Ud max. at Ie	2.5 V

Environmental conditions

Ambient temperature	-5...55 °C
Contamination scale	3
EN 60068-2-27, Shock	Half-sinus, 30 g_n, 11 ms, 3x6
EN 60068-2-6, Vibration	10...55 Hz, amplitude 1 mm, 3x30 min
IP rating	IP67

Functional safety

MTTF (40 °C)	400 a

BOS 18M-PUV-PR30-S4
Order Code: BOS01J9

Interface

Supplementary output	PNP stability output
Switch function, supplementary output	Normally closed (NC)
Switching output	PNP normally open/normally closed (NO/NC)

Material

Housing material	Brass, nickel-plated
Material sensing surface	Glass
Surface protection	nickel-plated

Mechanical data

Dimension	Ø 18 x 75 mm
Mounting part	Nut M18x1
Tightening torque max.	15 Nm 30 Nm

Optical features

Ambient light max.	10000 Lux
Beam characteristic	Divergent
LED group per IEC 62471	Risk group 1
Light type	LED, red light
Polarizing filter	yes
Principle of optical operation	Retroreflective sensor
Switching function, optical	dark-on/light-on
Wave length	626 nm

Range/Distance

Range	0...5 m
Rated operating distance Sn	5 m Adjustable
Temperature drift max. (% of Sr)	10 %

Remarks

Order accessories separately.
For additional information, refer to user's guide.
Polarizing filters prevent spurious switching due to reflecting and shiny parts.
The sensor is functional again after the overload has been eliminated.
For more information about MTTF and B10d see MTTF / B10d Certificate

Indication of the MTTF- / B10d value does not represent a binding composition and/or life expectancy assurance; these are simply experiential values with no warranty implications. These declared values also do not extend the expiration period for defect claims or affect it in any way.

Connector Drawings

Wiring Diagrams (Schematic)

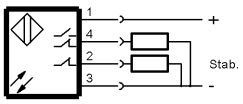

Opto Symbols