Photoelectric Sensors

# BOS 18KW-PA-1TB-S4-C
# Order Code: BOS00LZ

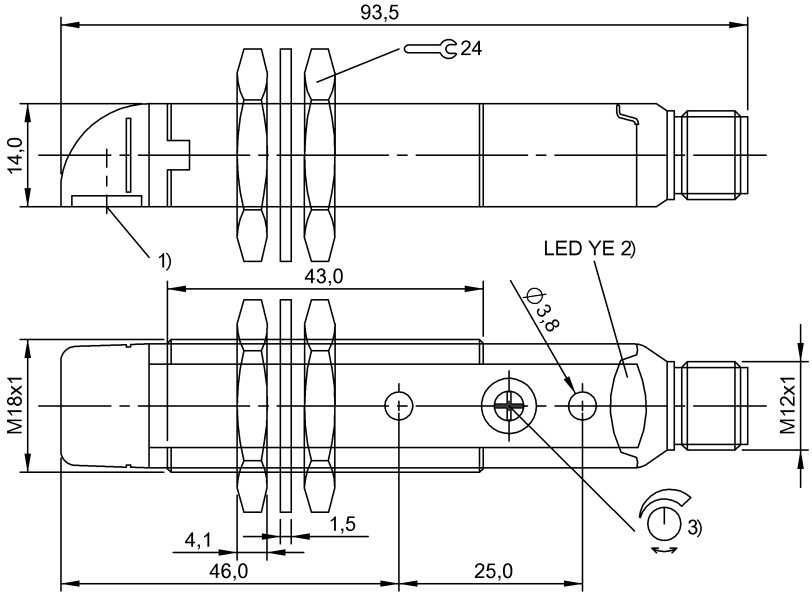


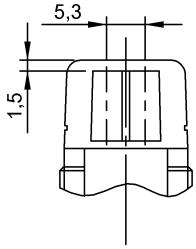


1) Optical axis, 2) Output function, 3) Sn

## Basic features

| | |
|---|---|
| Approval/Conformity | CE<br>UKCA<br>cULus<br>WEEE |
| Basic standard | IEC 60947-5-2 |
| Principle of operation | Photoelectric sensor |
| Reference reflector | BOS R-1 |
| Series | 18KW |
| Style | Flat cylinder<br>Optics 90° |
| Trademark | Global |

## Display/Operation

| | |
|---|---|
| Adjuster | Potentiometer 270° |
| Display | Output function- LED yellow |
| Setting | Sensitivity (Sn) |

## Electrical connection

| | |
|---|---|
| Connection | Connector, M12x1-Male, 4-pin |
| Polarity reversal protected | yes |
| Short-circuit protection | yes |

## Electrical data

| | |
|---|---|
| No-load current Io max. at Ue | 35 mA |
| Operating voltage Ub | 10...30 VDC |
| Rated insulation voltage Ui | 75 V DC |
| Rated operating current Ie | 100 mA |
| Rated operating voltage Ue DC | 24 V |
| Ripple max. (% of Ue) | 8 % |
| Switching frequency | 1000 Hz |
| Turn-off delay toff max. | 0.5 ms |
| Turn-on delay ton max. | 0.5 ms |
| Voltage drop Ud max. at Ie | 2 V |

## Environmental conditions

| | |
|---|---|
| Ambient temperature | -25...55 °C |
| EN 60068-2-27, Shock | Half-sinus, 30 $g_n$, 11 ms, 3x6 |
| EN 60068-2-6, Vibration | 10...55 Hz, amplitude 0.5 mm, 3x30 min |
| IP rating | IP67 |

## Functional safety

| | |
|---|---|
| MTTF (40 °C) | 774 a |

## Interface

| | |
|---|---|
| Switching output | PNP normally closed (NC)<br>PNP normally open (NO) Pins 4-2 |

## Material

| | |
|---|---|
| Housing material | PBT |
| Material sensing surface | PMMA |

## Mechanical data

| | |
|---|---|
| Dimension | Ø 18 x 93.5 mm |
| Mounting part | Screw M3<br>Nut M18x1 |
| Tightening torque max. | 1.5 Nm |

## Optical features

| | |
|---|---|
| Ambient light max. | 5000 Lux |
| Blind zone | 100 mm |
| Light type | LED, red light |
| Polarizing filter | yes |
| Principle of optical operation | Retroreflective sensor |
| Special optical feature | Transparency detection |
| Switching function, optical | dark-on |
| Wave length | 660 nm |

## Range/Distance

| | |
|---|---|
| Range | 0...1.7 m |
| Rated operating distance Sn | 1.7 m, Adjustable |

## Remarks

The sensor is functional again after the overload has been eliminated.
Polarizing filters prevent spurious switching due to reflecting and shiny parts.
For additional information, refer to user's guide.
Order accessories separately.
Actuation object (target): gray card, 200 x 200, 90 % remission, lateral approach, approach direction vertical to lens axis plane.
For more information about MTTF and B10d see MTTF / B10d Certificate

Indication of the MTTF- / B10d value does not represent a binding composition and/or life expectancy assurance; these are simply experiential values with no warranty implications. These declared values also do not extend the expiration period for defect claims or affect it in any way.

## Connector Drawings

## Wiring Diagrams (Schematic)

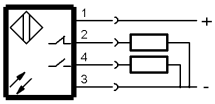


## Opto Symbols