Mechanical Cam Switches

# BNS 816-B08-THA-16-602-11
# Order Code: BNS03C4

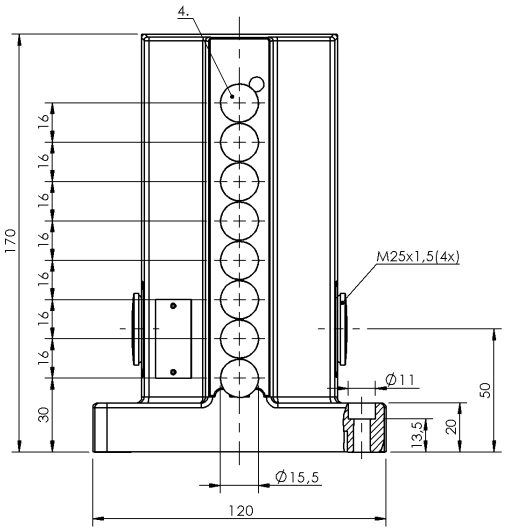


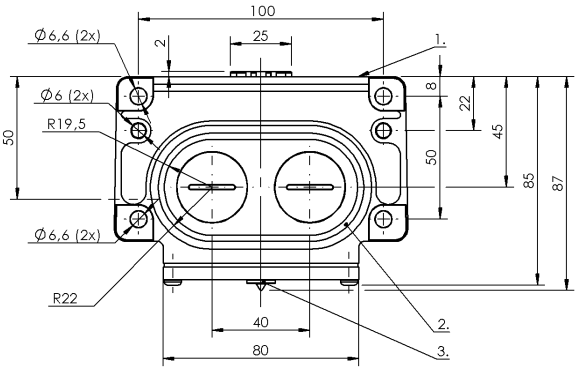


1) Reference edge, 2) Sealing ring, 3) Function indicator FD/FE/LL, 4) Sensing surface

## Basic features

| | |
|---|---|
| Approval/Conformity | CE<br>UKCA<br>WEEE |
| Basic standard | IEC 60947-5-2 |
| DIN switch | DIN 43697 |
| Operating principle | 1-8. Switch position: Inductive |
| Version | Inductive |

## Display/Operation

| | |
|---|---|
| Function indicator | 1-8. Switch position: Optical fiber |

## Electrical connection

| | |
|---|---|
| Connection type | 1-8. Switch position: Screw terminal |
| Electrical version | 3-/4-wire |

## Electrical data

| | |
|---|---|
| Continuous current | 1-8. Switch position: 0.13 A |
| Rated operating voltage Ue | 1-8. Switch position: 24 V DC |

## Environmental conditions

| | |
|---|---|
| Ambient temperature | -25...70 °C |
| IP rating | IP67 |

## Functional safety

| | |
|---|---|
| MTTF (40 °C) | BES 517-142-Y: 1680 a |

## Interface

| | |
|---|---|
| Switching output | PNP complementary |

## Material

| | |
|---|---|
| Housing material | Aluminium, Anodized |
| Housing material, surface protection | Anodized |

## Mechanical data

| | |
|---|---|
| Dimension | 120 x 170 x 86.5 mm |
| Distance cam - active surface | 1-8. Switch position: 0...4.05 mm |
| Flange, feed-through | 2 threaded exit M25 |
| Installation | Vertical |
| Plunger spacing 1st switch position | 30 mm |
| Switching element | 1-8. Switch position: BES 517-142-Y |

## Range/Distance

| | |
|---|---|
| Assured operating distance Sa | 1-8. Switch position: 4 mm |
| Range | 5 mm |
| Rated operating distance Sn | 1-8. Switch position: 5.0 mm |
| Switch position spacing | 16 mm |
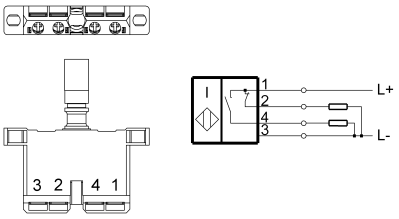
## Wiring Diagrams (Schematic)