Mechanical Cam Switches

BNS 816-B06-THA-16-602-11
Order Code: BNS03AR

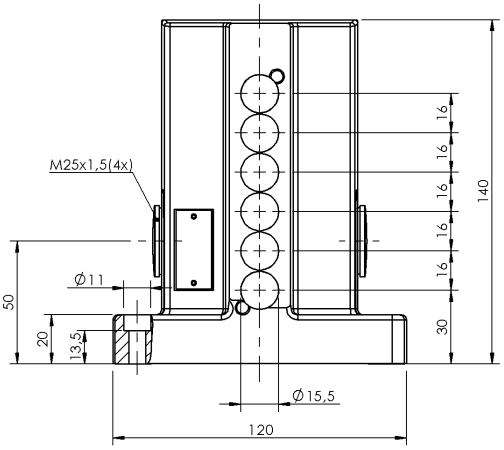

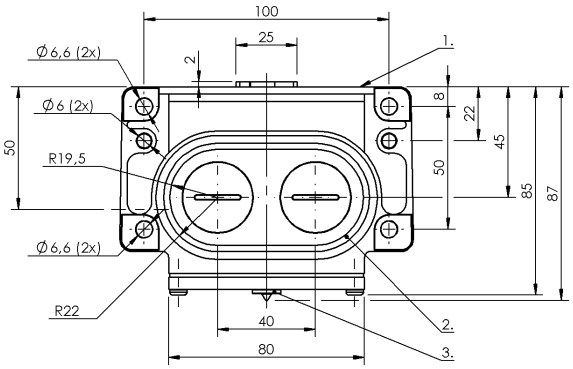

1) Reference edge, 2) Sealing ring, 3) Function indicator FD/FE/LL, 4) Sensing surface

Basic features

Approval/Conformity	CE UKCA WEEE
Basic standard	IEC 60947-5-2
DIN switch	DIN 43697
Operating principle	1-6. Switch position: Inductive
Version	Inductive

Display/Operation

Function indicator	1-6. Switch position: Optical fiber

Electrical connection

Connection type	1-6. Switch position: Screw terminal
Electrical version	3-/4-wire

Electrical data

Continuous current	1-6. Switch position: 0.13 A
Rated operating voltage Ue	1-6. Switch position: 24 V DC

Environmental conditions

Ambient temperature	-25...70 °C
IP rating	IP67

Functional safety

MTTF (40 °C)	BES 517-142-Y: 1680 a

Interface

Switching output	PNP complementary

Material

Housing material	Aluminium, Anodized
Housing material, surface protection	Anodized

Mechanical data

Dimension	120 x 140 x 86.5 mm
Distance cam - active surface	1-6. Switch position: 0...4.05 mm
Flange, feed-through	2 threaded exit M25
Installation	Vertical
Plunger spacing 1st switch position	30 mm
Switching element	1-6. Switch position: BES 517-142-Y

Range/Distance

Assured operating distance Sa	1-6. Switch position: 4 mm
Range	5 mm
Rated operating distance Sn	1-6. Switch position: 5.0 mm
Switch position spacing	16 mm
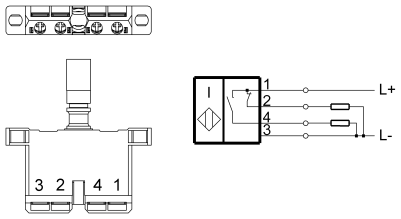
Wiring Diagrams (Schematic)