Mechanical Cam Switches

BNS 816-B04-TOB-10-603-11
Order Code: BNS03HL

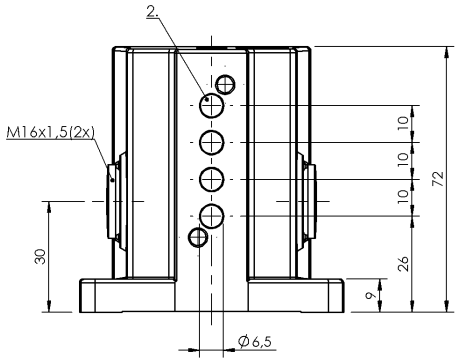

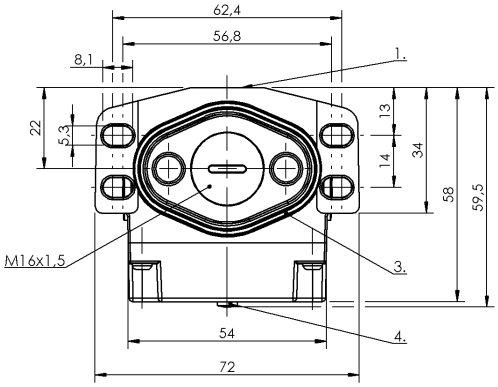

1) Reference edge, 2) Sensing surface, 3) Sealing ring, 4) Function indicator FD/FE/LL

Basic features

Approval/Conformity	CE UKCA WEEE
Basic standard	IEC 60947-5-2
Operating principle	1-4. Switch position: Inductive
Version	Inductive

Display/Operation

Function indicator	1-4. Switch position: Optical fiber

Electrical connection

Connection type	1-4. Switch position: Screw terminal
Electrical version	3-/4-wire

Electrical data

Continuous current	1-4. Switch position: 0.13 A
Rated operating voltage Ue	1-4. Switch position: 24 V DC

Environmental conditions

Ambient temperature	-25...70 °C
IP rating	IP67

Functional safety

MTTF (40 °C)	BES 517-312-Y: 1620 a

Interface

Switching output	PNP normally open (NO)

Material

Housing material	Aluminium, Anodized
Housing material, surface protection	Anodized

Mechanical data

Dimension	72 x 72 x 59.5 mm
Distance cam - active surface	1-4. Switch position: 0...0.90 mm
Flange, feed-through	1 threaded exit M16
Installation	Vertical
Plunger spacing 1st switch position	26 mm
Switching element	1-4. Switch position: BES 517-312-Y

Range/Distance

Assured operating distance Sa	1-4. Switch position: 0.9 mm
Range	1.1 mm
Rated operating distance Sn	1-4. Switch position: 1.1 mm
Switch position spacing	10 mm
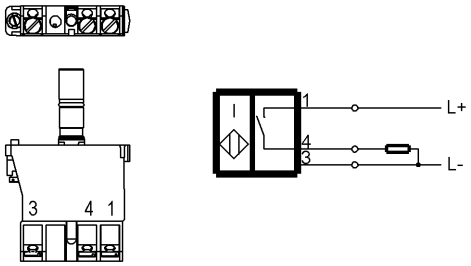
Wiring Diagrams (Schematic)