Mechanical Cam Switches

BNS 816-B04-PA-12-602-11-S90R
Order Code: BNS039M

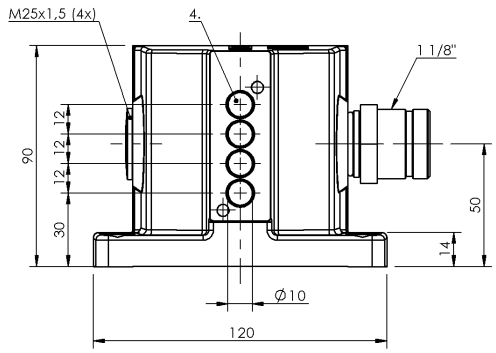

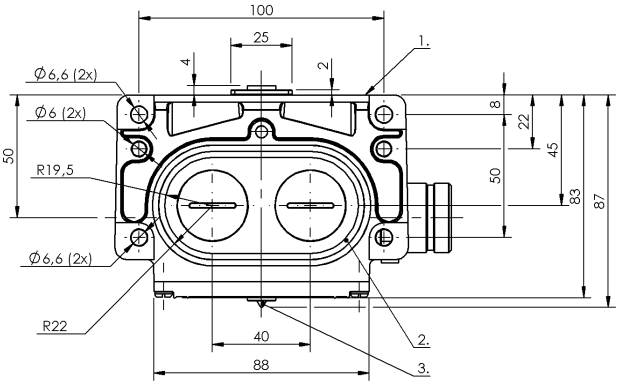

1) Reference edge, 2) Sealing ring, 3) Function indicator FD/FE/LL, 4) Sensing surface

Basic features

Approval/Conformity	CE UKCA WEEE
Basic standard	IEC 60947-5-2
DIN switch	DIN 43697
Operating principle	1-4. Switch position: Inductive
Version	Inductive

Display/Operation

Function indicator	1-4. Switch position: Optical fiber

Electrical connection

Connection	1 1/8"-Flange male, 12-pin
Connection type	1. Switch position: Connector
Electrical version	3-/4-wire

Electrical data

Continuous current	1-4. Switch position: 0.2 A
Rated operating voltage Ue	1-4. Switch position: 24 V DC

Environmental conditions

Ambient temperature	-25...70 °C
IP rating	IP67

Functional safety

MTTF (40 °C)	BES 517-110: 490 a

Interface

Switching output	PNP complementary

Material

Housing material	Aluminium, Anodized
Housing material, surface protection	Anodized

Mechanical data

Dimension	120 x 90 x 87 mm
Distance cam - active surface	1-4. Switch position: 0...1.62 mm
Flange, feed-through	2 threaded exit M25
Installation	Vertical
Plunger spacing 1st switch position	30 mm
Switching element	1-4. Switch position: BES 517-110

Range/Distance

Assured operating distance Sa	1-4. Switch position: 1.6 mm
Range	2 mm
Rated operating distance Sn	1-4. Switch position: 2.0 mm
Switch position spacing	12 mm

Connector Drawings

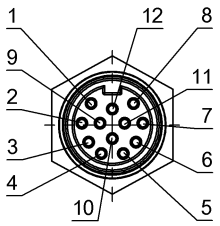

View of connector side
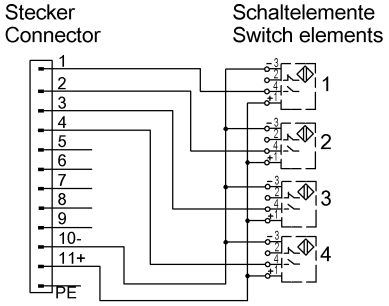
Wiring Diagrams (Schematic)