Photoelectric Sensors

BFB 75K-002-N-S75
Order Code: BFB0005

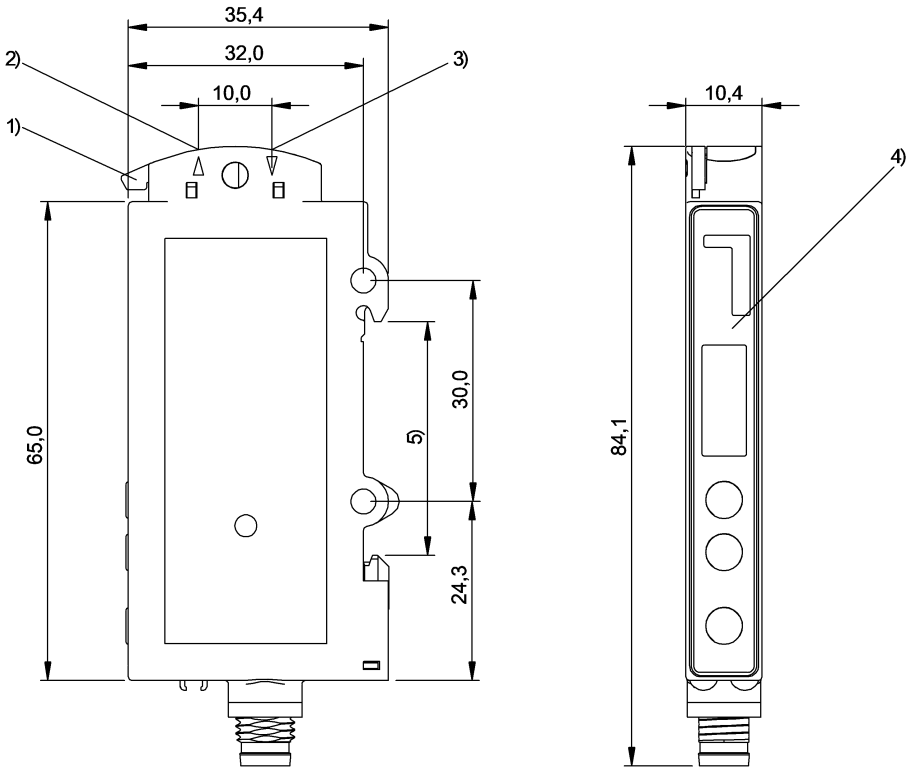

1) Fiber clamp, 2) Receiver, 3) Emitter, 4) Display and control panel, 5) For DIN rail 35mm

Basic features

Approval/Conformity	cULus CE WEEE
Basic standard	IEC 60947-5-2
Principle of operation	Fiber optic device
Series	75K
Style	Square Straight connection

Display/Operation

Adjuster	Key (3x)
Display	Output function- LED yellow LED green: Power Setup mode active - LED red Function selected - LED red Switching function NC - LED red Switching point - LCD Signal strength - LCD Special mode active - LED red Key disable active: LED red Time function active: LED red

Setting	LCD read direction Time function Factory setting (Reset) Mode normal/fine/fast/far Duration of single pulse Rated switching distance (Sn), 2 values Display on/off Delay time Key disable on/off Light-on/dark-on Sensitivity (Sn)

Electrical connection

Connection	Connector, M8x1-Male, 4-pin
Fiber optics connection	Ø 2.2 mm
Polarity reversal protected	yes
Short-circuit protection	yes

Electrical data

Input function	Teach Sn Key disable on/off
No-load current Io max. at Ue	25 mA
Operating voltage Ub	10...30 VDC
Protection class	II
Rated insulation voltage Ui	75 V DC
Rated operating current Ie	100 mA
Rated operating voltage Ue DC	24 V
Ripple max. (% of Ue)	10 %
Switching frequency	8000 Hz /1000 Hz/125 Hz
Turn-off delay toff max.	0.06/0.5/8 ms
Turn-on delay ton max.	0.06/0.5/8 ms
Voltage drop Ud max. at Ie	2.4 V

Environmental conditions

Ambient temperature	-20...60 °C
EN 60068-2-6, Vibration	55 Hz, amplitude 1 mm, 3x30 min
IP rating	IP64

Interface

Duration of time function	1/5/.../2000 ms (15 steps)
Switching output	NPN normally open/normally closed (NO/NC)
Time function	switch-off delay Turn-on delay Single pulse

Material

Housing material	ABS

Mechanical data

Dimension	10.4 x 35.4 x 84 mm
Mounting part	Screw M3 DIN rail 35 mm

Optical features

Ambient light max.	5000 Lux
Light type	LED, red light
Principle of optical operation	depends on fiber optics
Switching function, optical	Light/dark switching
Wave length	660 nm

Range/Distance

Hysteresis H max. (% of Sr)	10.0 %
Range	depends on fiber optics

Remarks

Order accessories separately.
For additional information, refer to user's guide.
The sensor is functional again after the overload has been eliminated.
Do not press key using a pointed tool.

Connector Drawings

Wiring Diagrams (Schematic)

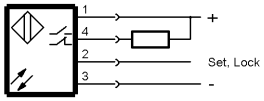

Help Views

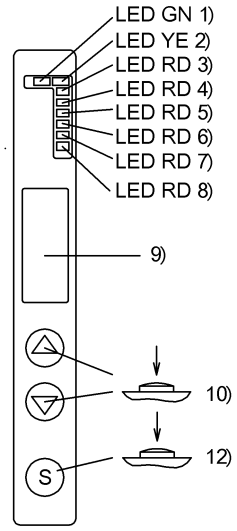

1) Output function
2) Operating voltage
3) Setup mode active
4) Key disable active
5) Switching function NC
6) Teach-in active
7) Time function active
8) Special mode active
9) Signal strength/switchpoint
10) Function/mode select
11) Confirm teach-in/selection
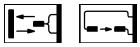
Opto Symbols