Inductive Sensors

BES M18MP-NSC50B-BV03
Order Code: BES05E1

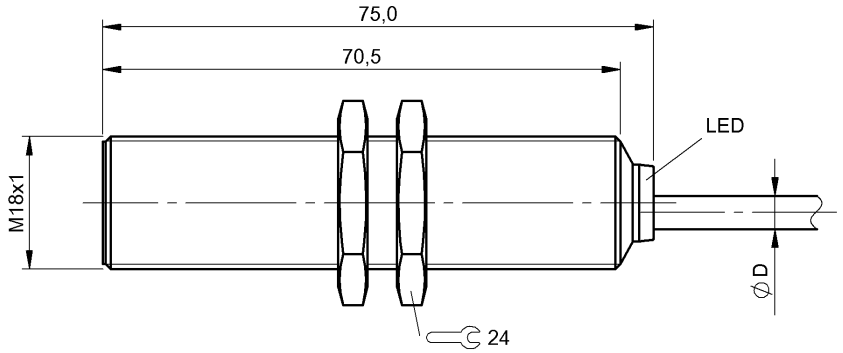

Basic features

Approval/Conformity	CE UKCA cULus WEEE
Basic standard	IEC 60947-5-2

Display/Operation

Function indicator	yes
Power indicator	no

Electrical connection

Cable diameter D	4.50 mm
Cable length L	3 m
Conductor cross-section	0.34 mm²
Connection type	Cable, 3.00 m, PVC
Number of conductors	3
Polarity reversal protected	yes
Protection against device mix-ups	yes
Short-circuit protection	yes

Electrical data

Load capacitance max. at Ue	0.5 µF
Min. operating current Im	0 mA
No-load current Io max., damped	8 mA
No-load current Io max., undamped	2 mA
Operating voltage Ub	10...30 VDC
Output resistance Ra	33.0 kOhm + D
Protection class	II
Rated insulation voltage Ui	250 V AC
Rated operating current Ie	200 mA
Rated operating voltage Ue DC	24 V
Rated short circuit current	100 A
Ready delay tv max.	30 ms
Residual current Ir max.	10 µA
Ripple max. (% of Ue)	15 %
Switching frequency	2000 Hz
Utilization category	DC -13
Voltage drop static max.	2.5 V

Environmental conditions

Ambient temperature	-40...85 °C
Contamination scale	3
EN 60068-2-27, Shock	Half-sinus, 30 g_n, 11 ms
EN 60068-2-6, Vibration	55 Hz, amplitude 1 mm, 3x30 min
IP rating	IP68

Functional safety

MTTF (40 °C)	411 a

Interface

Switching output	NPN normally open (NO)

Material

Housing material	Brass, Nickel-free coated
Material jacket	PVC
Material sensing surface	PBT

Mechanical data

Dimension	Ø 18 x 75 mm
Installation	for flush mounting
Mounting length	70.5 mm
Size	M18x1
Tightening torque	25 Nm

Range/Distance

Assured operating distance Sa	4.0 mm
Hysteresis H max. (% of Sr)	15.0 %
Rated operating distance Sn	5.0 mm
Real switching distance sr	5 mm
Repeat accuracy max. (% of Sr)	5.0 %
Temperature drift max. (% of Sr)	10 %
Tolerance Sr	±10 %

Remarks

The sensor is functional again after the overload has been eliminated.
For more information about MTTF and B10d see MTTF / B10d Certificate

Indication of the MTTF- / B10d value does not represent a binding composition and/or life expectancy assurance; these are simply experiential values with no warranty implications. These declared values also do not extend the expiration period for defect claims or affect it in any way.
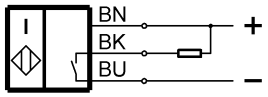
Wiring Diagrams (Schematic)