Inductive Sensors

BES M18MI-PSC40B-S04G-W03
Order Code: BES03MY

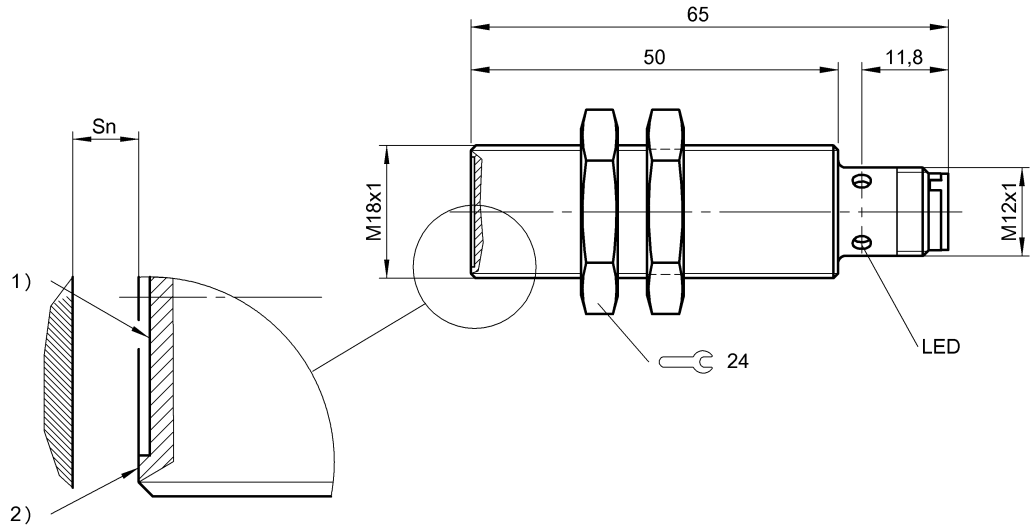

1) Active surface, ceramic+PTFE, 2) Impact protection

Basic features

Additional features	Weld immune
Approval/Conformity	cULus CE UKCA WEEE
Basic standard	IEC 60947-5-2
Trademark	BunkerProx

Display/Operation

Function indicator	yes
Power indicator	no

Electrical connection

Connection	M12x1-Male, 4-pin, A-coded
Polarity reversal protected	yes
Protection against device mix-ups	yes
Short-circuit protection	yes

Electrical data

Load capacitance max. at Ue	0.5 µF
Magnetic field strength, interference field	100 kA/m
Min. operating current Im	0 mA
No-load current Io max., damped	15 mA
No-load current Io max., undamped	10 mA
Operating voltage Ub	10...30 VDC
Output resistance Ra	33.0 kOhm + D
Rated insulation voltage Ui	75 V DC
Rated operating current Ie	200 mA
Rated operating voltage Ue DC	24 V
Rated short circuit current	100 A
Ready delay tv max.	30 ms
Residual current Ir max.	1 µA
Ripple max. (% of Ue)	10 %
Switching frequency	50 Hz
Utilization category	DC -13
Voltage drop static max.	2.5 V

Environmental conditions

Ambient temperature	-25...70 °C
Contamination scale	3
EN 60068-2-27, Shock	Half-sinus, 30 g_n, 11 ms
EN 60068-2-6, Vibration	55 Hz, amplitude 1 mm, 3x30 min
IP rating	IP67
Magnetic field immune	magnetic field immune (AC/DC)

Interface

Switching output	PNP normally open (NO)

BES M18MI-PSC40B-S04G-W03
Order Code: BES03MY

Material

Housing material	Brass, PTFE coated
Material sensing surface	Ceramic, PTFE coated

Mechanical data

Dimension	Ø 18 x 65 mm
Installation	for flush mounting
Mounting length	50.00 mm
Size	M18x1
Tightening torque	15 Nm

Range/Distance

Assured operating distance Sa	3.2 mm
Hysteresis H max. (% of Sr)	15.0 %
Rated operating distance Sn	4 mm
Real switching distance sr	4 mm
Repeat accuracy max. (% of Sr)	5.0 %
Temperature drift max. (% of Sr)	10 %
Tolerance Sr	±10 %

Remarks

The sensor is functional again after the overload has been eliminated.

Connector Drawings
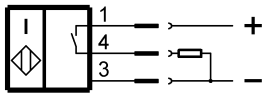
Wiring Diagrams (Schematic)