Inductive Sensors

BES M12MI-PSC40A-S04G-W07
Order Code: BES05KU

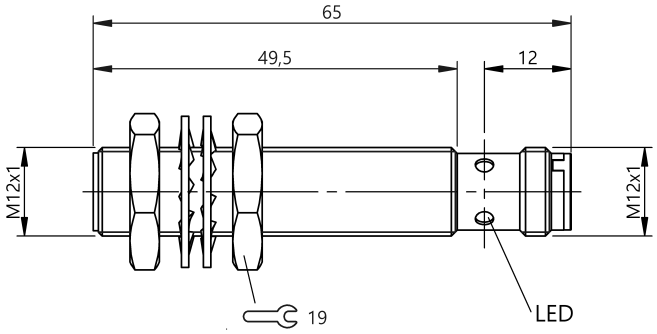

Basic features

Additional features	Factor 1 Extended temperature range Housing resistant to weld spatter weld-immune (magnetic field 100kA/m)
Approval/Conformity	CE UKCA WEEE
Basic standard	IEC 60947-5-2
Scope of delivery	2x nut M12x1 Toothed washer D13 (2x)
Trademark	Factor 1

Display/Operation

Function indicator	yes
Power indicator	no

Electrical connection

Connection	M12x1-Male, 3-pin, A-coded
Electrical version	3-wire
Polarity reversal protected	yes
Protection against device mix-ups	yes
Short-circuit protection	yes

Electrical data

Load capacitance max. at Ue	1 µF
Min. operating current Im	0 mA
No-load current Io max., damped	27 mA
No-load current Io max., undamped	20 mA
Operating voltage Ub	10...30 VDC
Output resistance Ra	100.0 kOhm
Protection class	II
Rated operating current Ie	200 mA
Rated operating voltage Ue DC	24 V
Rated short circuit current	100 A
Ready delay tv max.	50 ms
Ripple max. (% of Ue)	10 %
Switching frequency	2000 Hz
Utilization category	DC -13
Voltage drop static max.	1.5 V

Environmental conditions

Ambient temperature	-40...85 °C
Contamination scale	3
EN 60068-2-27, Shock	Half-sinus, 30 g_n, 11 ms
EN 60068-2-6, Vibration	55 Hz, amplitude 1 mm, 3x30 min
IP rating	IP68, according to BWN Pr 20
Magnetic field immune	magnetic field immune (AC/DC)

Functional safety

MTTF (40 °C)	365 a

Interface

Switching output	PNP normally open (NO)

Material

Housing material	Brass, PTFE coated
Material sensing surface	PBT, PTFE coated

Mechanical data

Dimension	Ø 12 x 65 mm
Installation	for flush mounting
Mounting length	49.5 mm
Size	M12x1
Tightening torque	12 Nm

Range/Distance

Assured operating distance Sa	3.2 mm
Hysteresis H max. (% of Sr)	15.0 %
Rated operating distance Sn	4 mm
Real switching distance sr	4 mm
Repeat accuracy max. (% of Sr)	5.0 %
Switching distance marking	■■
Temperature drift max. (% of Sr)	10 %
Tolerance Sr	10 %

Remarks

The sensor is functional again after the overload has been eliminated.
When using a cast iron target the deviation in the effective operating distance Sr will be greater than ±10%.
When installing the sensor in a clamp with positive stop deviations in Sr may result.
For more information about MTTF and B10d see MTTF / B10d Certificate

Indication of the MTTF- / B10d value does not represent a binding composition and/or life expectancy assurance; these are simply experiential values with no warranty implications. These declared values also do not extend the expiration period for defect claims or affect it in any way.

Connector Drawings

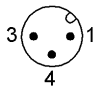
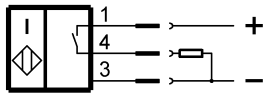
Wiring Diagrams (Schematic)