Capacitive Sensors

BCS G06T4D2-POM15C-S49G
Order Code: BCS001T

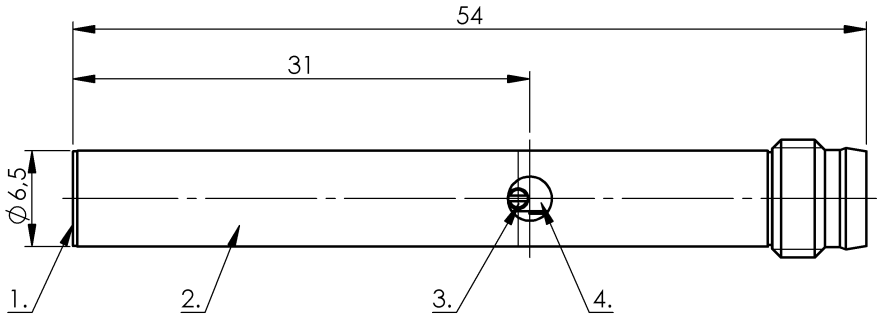

1) Sensing surface, 2) Housing, 3) Potentiometer, 4) LED function indicator

Basic features

Approval/Conformity	CE cULus WEEE UKCA
Basic standard	IEC 60947-5-2
Scope of delivery	Screwdriver Short guide
Sensitivity	Switching distance adjustable
Series	G06

Display/Operation

Function indicator	yes

Electrical connection

Connection	M8x1-Male, 3-pin
Number of pins	3
Polarity reversal protected	yes
Protection against device mix-ups	yes
Short-circuit protection	yes

Electrical data

No-load current Io max. at Ue	10 mA
Operating voltage Ub	11...30 VDC
Rated insulation voltage Ui	75 V DC
Rated operating current Ie	50 mA
Rated operating voltage Ue DC	24 V
Ripple max. (% of Ue)	10 %
Switching frequency	100 Hz
Utilization category	DC -13
Voltage drop static max.	2 V

Environmental conditions

Ambient temperature	-10...70 °C
Contamination scale	1
IP rating	IP65

Functional safety

MTTF (40 °C)	444 a

Interface

Switching output	PNP normally closed (NC)

Material

Housing material	1.4301 stainless steel
Material sensing surface	PTFE

Mechanical data

Dimension	Ø 6.5 x 54 mm
Installation	for flush mounting
Size	D6.5

Range/Distance

Hysteresis H max. (% of Sr)	15.0 %
Measuring range	0.1...1.5 mm
Rated operating distance Sn	1.5 mm
Repeat accuracy max. (% of Sr)	2.0 %
Temperature drift max. (% of Sr)	15 %

Remarks

The potentiometer does not have a fixed stop, but can be turned endlessly without destroying anything.
If no change in the switching signal is detected, the potentiometer should be turned forwards or backwards until a signal change occurs at the output.
For more information about MTTF and B10d see MTTF / B10d Certificate

Indication of the MTTF- / B10d value does not represent a binding composition and/or life expectancy assurance; these are simply experiential values with no warranty implications. These declared values also do not extend the expiration period for defect claims or affect it in any way.

Connector Drawings
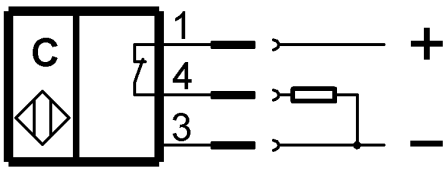
Wiring Diagrams (Schematic)