Inductive Sensors

BAW M18ME-UAC50B-BP00,2-GS04
Order Code: BAW001Z

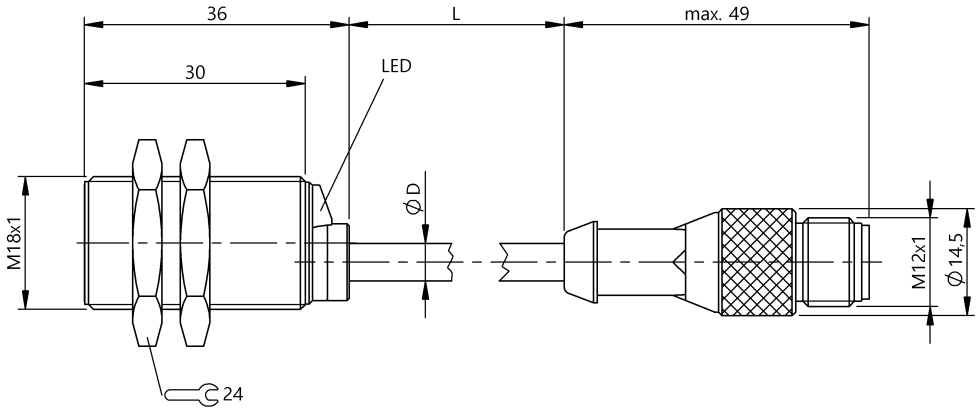

Basic features

Approval/Conformity	CE UKCA cULus WEEE
Basic standard	IEC 60947-5-2 IEC 60947-5-7

Display/Operation

Function indicator	Adjustment indicator
Power indicator	no

Electrical connection

Cable diameter D	4.70 mm
Cable length L	0.2 m
Connection	M12x1-Male, 3-pin, A-coded
Connection type	Cable with connector, 0.20 m, PUR
Polarity reversal protected	yes
Protection against device mix-ups	yes

Electrical data

Limit frequency –3 dB	500 Hz
Load resistance RL min.	2000 Ohm
No-load current Io max. at Ue	10 mA
Operating voltage Ub	15...30 VDC
Rated insulation voltage Ui	75 V DC
Rated operating voltage Ue DC	24 V
Ripple max. (% of Ue)	15 %

Environmental conditions

Ambient temperature	-10...70 °C
Contamination scale	3
EN 60068-2-27, Shock	Half-sinus, 30 g_n, 11 ms
EN 60068-2-6, Vibration	55 Hz, amplitude 1 mm, 3x30 min
IP rating	IP67

Functional safety

MTTF (40 °C)	640 a

Interface

Output characteristic	falling on approach
Output voltage at SI max.	10 V
Output voltage at SI min.	0 V
Output voltage at Se	5 V

Material

Housing material	Brass, nickel-plated
Material jacket	PUR
Material sensing surface	PBT

Mechanical data

Dimension	Ø 18 x 36 mm
Installation	for flush mounting
Mounting length	30.0 mm
Size	M18x1
Tightening torque	25 Nm

Range/Distance

Linearity range Sl	1...5 mm
Measuring range	1...5 mm
Non-linearity max.	±120 µm
Repeat accuracy per BWN	±8 µm
Temperature drift max. from end value	±5.0 %

Remarks

When used in Balluff clamping holders, Ua may be reduced by max. 10%
Values referenced to axial approach of St 37 target. For other materials correction factors are applied.
Scattering (e.g. due to manufacturing tolerances) is described by the tolerance T at Se. This can be approximated using the formula: T = (slmax + slmin) / 20 = ± xx mm.
For more information about MTTF and B10d see MTTF / B10d Certificate

Indication of the MTTF- / B10d value does not represent a binding composition and/or life expectancy assurance; these are simply experiential values with no warranty implications. These declared values also do not extend the expiration period for defect claims or affect it in any way.

Connector Drawings

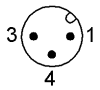

Wiring Diagrams (Schematic)

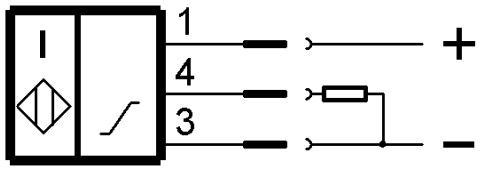
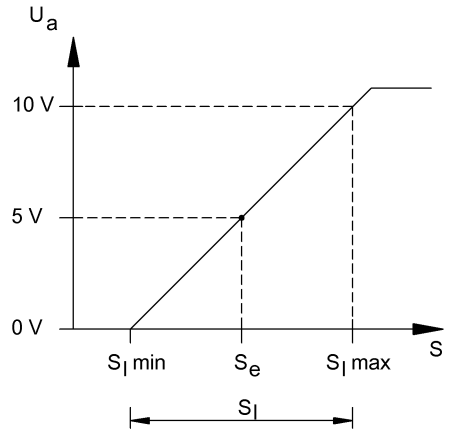
Technical Drawings