Inductive Sensors

BAW M12ME-UAC20C-S04G
Order Code: BAW006H

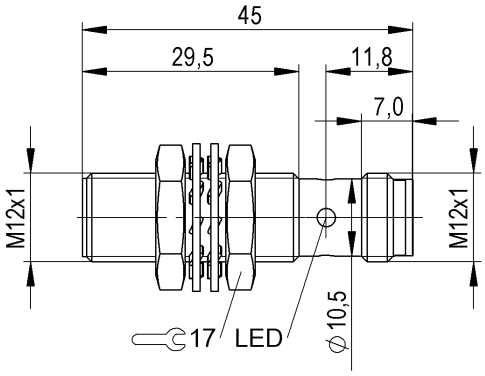

Basic features

Approval/Conformity	CE cULus WEEE
Basic standard	IEC 60947-5-2 IEC 60947-5-7

Display/Operation

Function indicator	Adjustment indicator
Power indicator	no

Electrical connection

Connection	M12x1-Male, 3-pin, A-coded
Polarity reversal protected	yes
Protection against device mix-ups	yes
Short-circuit protection	yes

Electrical data

Limit frequency –3 dB	1000 Hz
Load resistance RL min.	2000 Ohm
No-load current Io max. at Ue	15 mA
Operating voltage Ub	15...30 VDC
Protection class	II
Rated insulation voltage Ui	250 V AC
Rated operating voltage Ue DC	24 V
Ripple max. (% of Ue)	15 %
Slope U	6.67 V/mm

Environmental conditions

Ambient temperature	-40...80 °C
Contamination scale	3
EN 60068-2-27, Shock	Half-sinus, 30 g_n, 11 ms
EN 60068-2-6, Vibration	55 Hz, amplitude 1 mm, 3x30 min
IP rating	IP67

Functional safety

MTTF (40 °C)	550 a

Interface

Analog output	Analog, voltage 0...10 V
Output characteristic	falling on approach
Output voltage at Sl max.	10 V
Output voltage at Sl min.	0 V
Output voltage at Se	5 V

Material

Housing material	Brass, Nickel-free coated
Material sensing surface	PBT

Mechanical data

Dimension	Ø 12 x 45 mm
Installation	for flush mounting
Mounting length	29.5 mm
Size	M12x1
Tightening torque	10 Nm

Range/Distance

Linearity range Sl	0.5...2 mm
Measuring range	0.5...2 mm

Non-linearity max.	±35 µm
Repeat accuracy per BWN	±7 µm
Temperature drift max. from end value	±5.0 %

Remarks

We recommend to connect the teach line to the negative lead (L-) when not in use.
Values referenced to axial approach of St 37 target. For other materials correction factors are applied.
The working range can be taught using the Teach line or the BAE PD-AW-009-S04 programmer (order code BAE00MN).
Scattering (e.g. due to manufacturing tolerances) is described by the tolerance T at Se. This can be approximated using the formula: T = (slmax + slmin) / 20 = ± xx mm.
UL-MARKINGS: - For use in NFPA 79 Applications only - Adapters providing field wiring means are available from the manufacturer. Refer to manufacturers information.
For more information about MTTF and B10d see MTTF / B10d Certificate

Indication of the MTTF- / B10d value does not represent a binding composition and/or life expectancy assurance; these are simply experiential values with no warranty implications. These declared values also do not extend the expiration period for defect claims or affect it in any way.

Connector Drawings

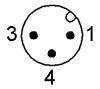

Wiring Diagrams (Schematic)

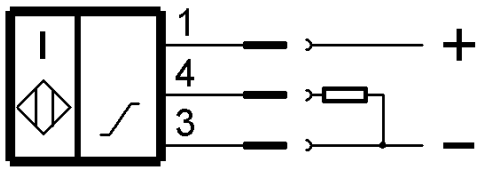
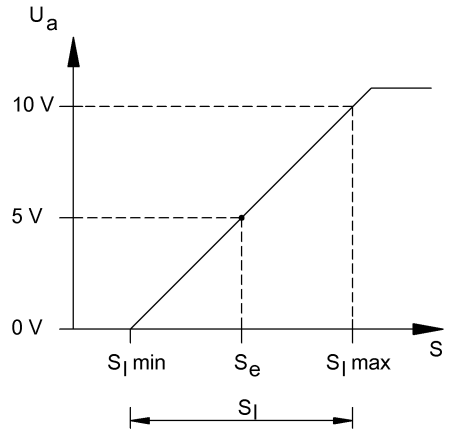
Technical Drawings